VICINITY MAP

SCALE: 1 IN = 200 FT.

LEGEND

---362---	EXISTING 2' CONTOUR
---360---	EXISTING 10' CONTOUR
---W---	EXISTING WATERLINE
	EXISTING FIRE HYDRANT
---G---	EXISTING GAS LINE
CB	EXISTING CATCH BASIN
	EXISTING STORM DRAIN LINE
SMH	EXISTING SEWER MANHOLE
---S---S---	EXISTING SEWER LINE
+ 360.0	EXISTING SPOT ELEVATION
	EXISTING STONEWALL
	EXISTING SIGN
LP	EXISTING LIGHT POLE
UP	EXISTING UTILITY POLE
TC	TOP OF CURB
DC	DROP OF CURB
TW	TOP OF WALL
BW	BOTTOM OF WALL
	EXISTING TREE

DRAWING LIST

DRAWING No.	TITLE
DRAWING 1	– EXISTING CONDITION PLAN
DRAWING 2	– SITE DEVELOPMENT PLAN
DRAWING 3	– EROSION & SEDIMENT CONTROL PLAN
DRAWING 4	– RETAINING WALL PLAN & DETAILS
DRAWING 5	– RETAINING WALL NOTES & DETAILS

THE EDUCATION LAW OF THE STATE OF NEW YORK PROHIBITS ANY PERSON ALTERING ANYTHING ON THESE DRAWINGS AND/OR THE ACCOMPANYING SPECIFICATIONS, UNLESS IT IS UNDER THE DIRECTION OF A LICENSED PROFESSIONAL ENGINEER. WHERE SUCH ALTERATIONS ARE MADE, THE PROFESSIONAL ENGINEER MUST SIGN, SEAL, DATE AND DESCRIBE THE FULL EXTENT OF THE ALTERATION ON THE DRAWINGS AND/OR IN THE SPECIFICATIONS. (NYS EDUCATION LAW SECTION 7209-2)

"UNAUTHORIZED ALTERATIONS OR ADDITIONS TO A SURVEY MAP BEARING A LICENSED LAND SURVEYOR'S EMBOSSED SEAL IS A VIOLATION OF SECTION 7209, SUBDIVISION 2, OF THE NEW YORK STATE EDUCATION LAW."
"ONLY COPIES FROM THE ORIGINAL TRACING OF THIS SURVEY MAP MARKED WITH THE LAND SURVEYOR'S EMBOSSED SEAL SHALL BE CONSIDERED TO BE VALID TRUE COPIES."
"CERTIFICATION INDICATED HERE ON SIGNIFY THAT THIS SURVEY WAS PREPARED IN ACCORDANCE WITH THE EXISTING CODE OF PRACTICE FOR LAND SURVEYOR'S ADOPTED BY THE DELAWARE – HUDSON LAND SURVEYORS ASSOCIATION. SAID CERTIFICATIONS SHALL RUN ONLY TO THOSE NAMED INDIVIDUALS AND/OR INSTITUTIONS FOR WHOM THE SURVEY WAS PREPARED. CERTIFICATIONS ARE NOT TRANSFERABLE TO ADDITIONAL INDIVIDUALS, INSTITUTIONS, THEIR SUCCESSORS AND/OR ASSIGNS OR SUBSEQUENT OWNERS."

STATE OF NEW YORK – RYAN A. NASHER – PROFESSIONAL ENGINEER
RYAN A. NASHER, P.E.
N.Y.S. P.E. LIC. NO. 89066

STATE OF NEW YORK – JOHN R. ATZL – LAND SURVEYOR
JOHN R. ATZL
N.Y.S. P.L.S. LIC. NO. 50228

PLANNING BOARD MEETING OF
OCT 14 2020
Town Of Orangetown

REVISION	DATE	DESCRIPTION
4	09-22-20	WALL DESIGN REVISED PER OWNER
3	07-17-20	PER MARTOS ENGINEERING COMMENTS
2	07-07-20	PER TOWN COMMENTS 07-01-20
1	06-29-20	PER PB MTG 06-01-20

AN&Z
ATZL, NASHER & ZIGLER P.C.
ENGINEERS-SURVEYORS-PLANNERS
232 North Main Street
New City, New York 10956
Tel: (845) 634-4694
Fax: (845) 634-5543
E-mail: info@anzny.com
Web: www.ANZNY.com

PROJECT:
119 TWEED BLVD., LLC

TOWN OF ORANGETOWN
ROCKLAND COUNTY, NEW YORK

TITLE:
EXISTING CONDITION PLAN

DRAWN BY: MM	CHECKED BY: JRA
DATE: JANUARY 22, 2020	SCALE: 1 IN. = 20 FT.
PROJECT NO: 4692	DRAWING NO: 1

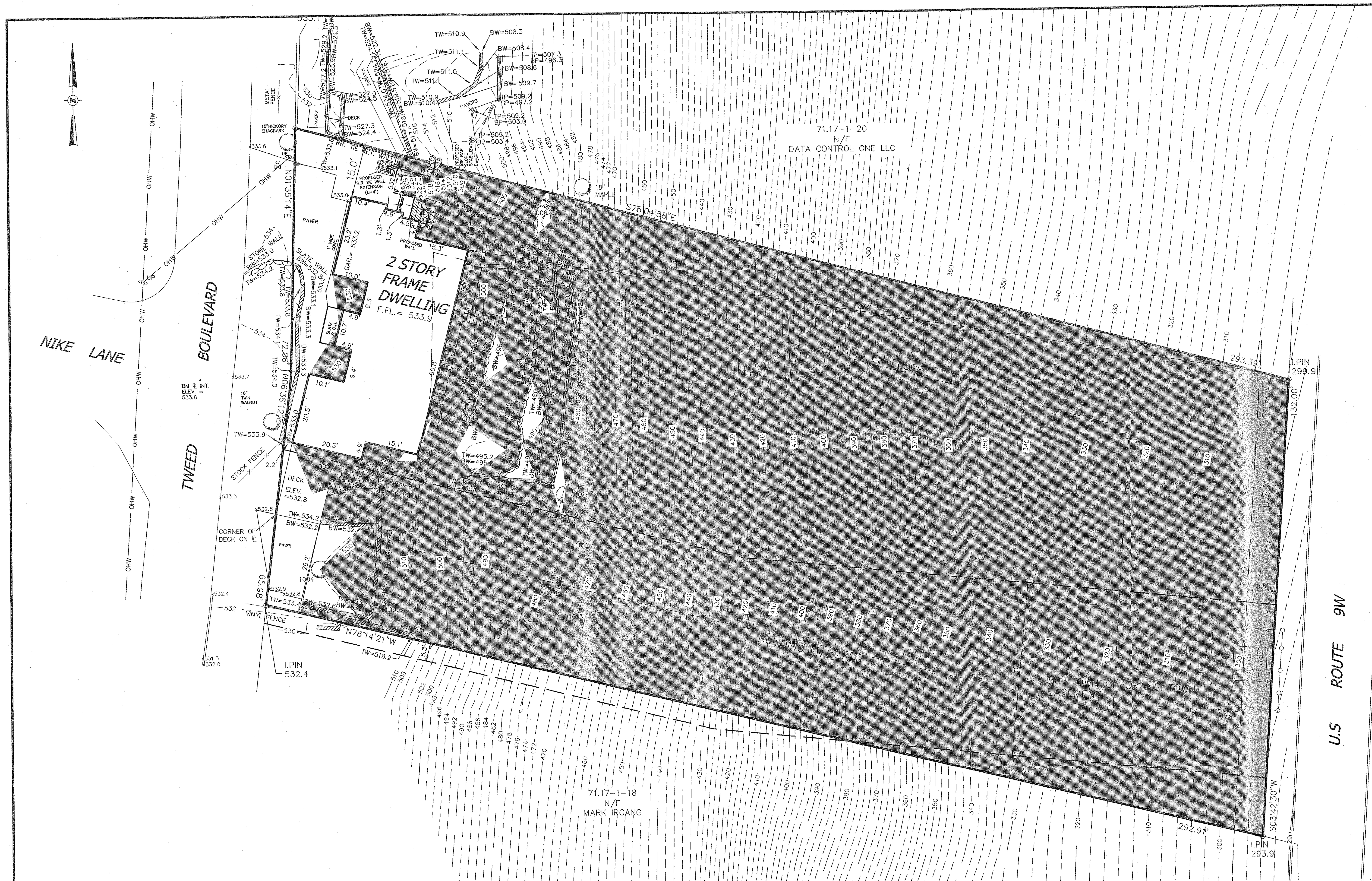

SITE PLAN
SCALE: 1"=20'

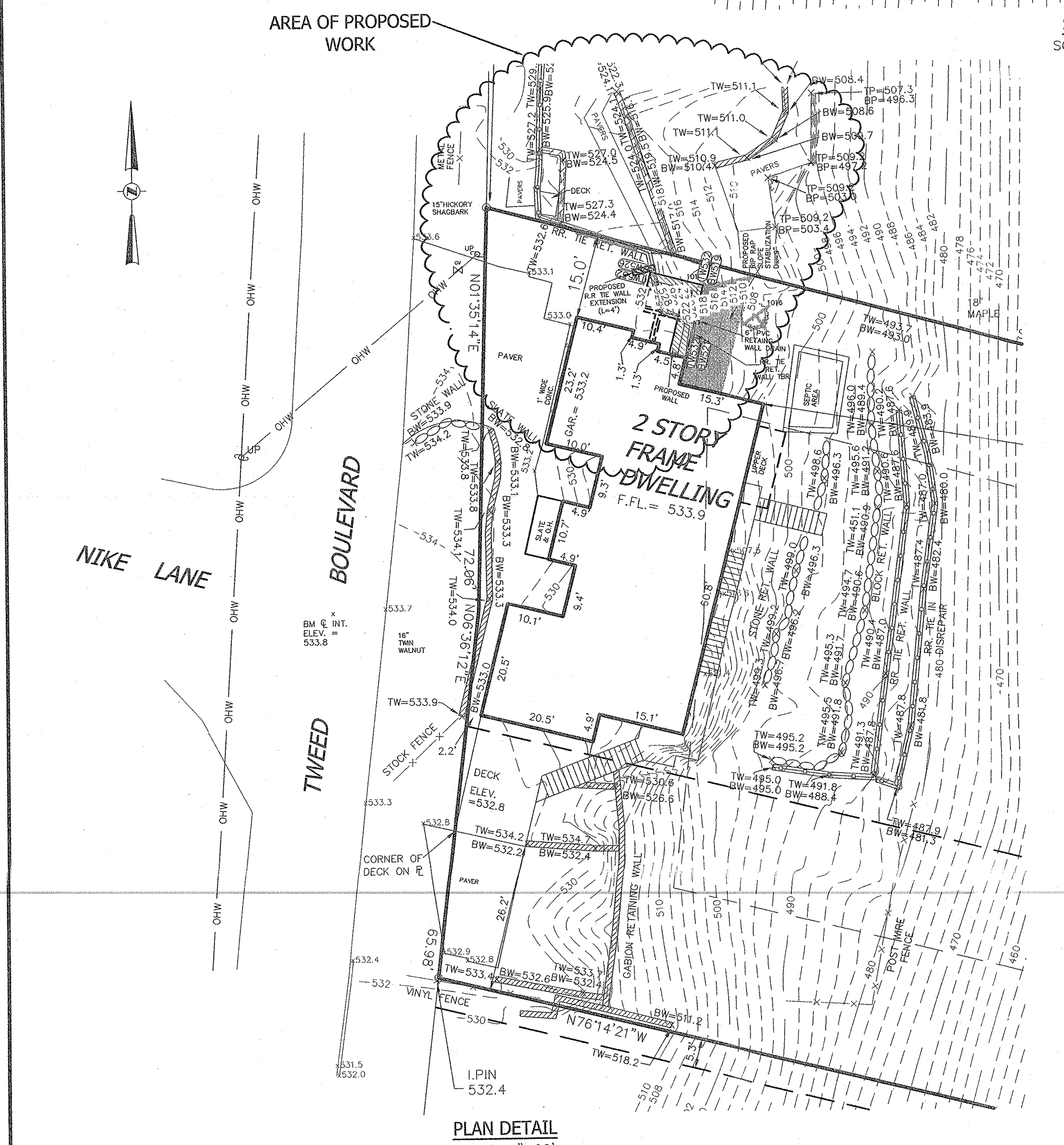

PLAN DETAIL
SCALE: 1"=20'

NOTES:

1. PRIOR TO CONSTRUCTION THE CONTRACTOR SHALL FOLLOW UNDERGROUND UTILITIES CALL CENTER GUIDELINES.

2. ALL UTILITIES, INCLUDING ELECTRIC AND TELEPHONE SERVICE SHALL BE INSTALLED UNDERGROUND.

3. NO BUILDING PERMIT WILL BE ISSUED UNTIL SEWAGE DISPOSAL ARRANGEMENTS HAVE BEEN APPROVED BY THE ROCKLAND COUNTY HEALTH DEPARTMENT AND/OR THE TOWN OF ORANGETOWN.

4. LOT DRAINAGE ON THIS PLAN SHALL CONSTITUTE EASEMENTS RUNNING WITH THE LAND AND SHALL NOT BE DISTURBED.

5. ANY EXISTING UTILITIES (POLES, HYDRANTS, ETC.) AFFECTED BY CONSTRUCTION OF THIS SITE PLAN SHALL BE RELOCATED AT THE DEVELOPERS EXPENSE PRIOR TO THE ISSUANCE OF ANY CERTIFICATE OF OCCUPANCY.

6. NO OPEN BURNING DURING CONSTRUCTION WITHOUT SPECIFIC PERMISSION FROM NEW YORK STATE DEPARTMENT OF HEALTH.

7. DATUM: U.S.G.S.-BENCHMARK-CENTERLINE OF INTERSECTION TWEED BLVD. WITH NIKE LN.

8. NO BUILDING PERMIT SHALL BE ISSUED UNTIL RESULTS OF TEST PITS HAVE BEEN SUBMITTED TO THE BUILDING DEPARTMENT.

9. DURING THE COURSE OF CONSTRUCTION, ALL STORM DRAIN INLETS SHALL BE PROTECTED WITH A HAY BALE FILTER (SEE DETAIL).

10. ALL AREAS DISTURBED BY ONSITE GRADING SHOULD BE LIMED AND FERTILIZED PRIOR TO SEEDING.

11. THE NEW CORNERS OF ALL LOTS SHALL BE MARKED WITH METAL RODS 3/4" IN DIAMETER, AND AT LEAST 30" IN LENGTH (TO BE INSTALLED AFTER FINAL GRADING). SAID PINS SHOWN THUS:

12. THIS SITE PLAN IS SUBJECT TO DETAILS OF GRADING, ROADS AND UTILITIES AS SHOWN ON CONSTRUCTION DRAWINGS APPROVED BY THE PLANNING BOARD AND FILED WITH THE TOWN CLERK.

13. SIDEWALKS AND CURBS SHALL BE INSTALLED IN ACCORDANCE WITH HIGHWAY DEPARTMENT SPECIFICATIONS.

14. TEMPORARY SEDIMENT ENTRAPMENT AREAS SHALL BE PROVIDED AS SHOWN TO INTERCEPT AND CLARIFY SILT LADEN RUNOFF FROM THE SITE. THESE MAY BE EXCAVATED OR MAY BE CREATED UTILIZING EARTHEN BERMS, RIP-RAP OR CRUSHED STONE DAMS, HAY BALES, OR OTHER SUITABLE MATERIALS. DIVERSION SWALES, BERMS OR THE CHANNELIZATION SHALL BE CONSTRUCTED TO INSURE THAT ALL SILT LADEN WATERS ARE DIRECTED INTO THE ENTRAPMENT AREAS, WHICH SHALL NOT BE PERMITTED TO FILL IN, BUT SHALL BE CLEANED PERIODICALLY DURING THE COURSE OF CONSTRUCTION. THE COLLECTED SILT SHALL BE DEPOSITED IN AREAS SAFE FROM FURTHER EROSION.

15. ALL DISTURBED AREAS, EXCEPT ROADWAYS, WHICH WILL REMAIN UNFURNISHED FOR MORE THAN THIRTY (30) DAYS SHALL BE TEMPORARILY SEEDED WITH 1/2 LB. OF RYE GRASS OR MULCH WITH 100 LBS. OF STRAW OR HAY PER 1,000 SQUARE FEET. ROADWAYS SHALL BE STABILIZED AS RAPIDLY AS PRACTICABLE BY THE INSTALLATION OF THE BASE COURSE.

16. SILT THAT LEAVES THE SITE IN SPITE OF THE REQUIRED PRECAUTIONS SHALL BE COLLECTED AND REMOVED AS DIRECTED BY APPROPRIATE MUNICIPAL AUTHORITIES.

17. AT THE COMPLETION OF THE PROJECT ALL TEMPORARY SILTATION DEVICES SHALL BE REMOVED AND THE AFFECTED AREAS REGRADED, PLANTED, OR TREATED IN ACCORDANCE WITH THE APPROVED SITE PLANS.

18. PERMANENT VEGETATION COVER SPECIFICATIONS:

LAWN AREA – PER 1,000 S.F.

15 LBS. 10-6-4 50 % SLOW RELEASE FERTILIZER
70 LBS. GRANULATE LIMESTONE
4 LBS. SEED MIXTURE

40 % KENTUCKY BLUE
40 % RED FESCUE
20 % PERENNIAL RYEGRASS

19. THIS PLAN DOES NOT CONFLICT WITH THE COUNTY OFFICIAL MAP AND HAS BEEN APPROVED IN THE MANNER SPECIFIED BY SECTION 239 L&M OF THE GENERAL MUNICIPAL LAW.

20. CERTIFICATE OF OCCUPANCY SHALL NOT BE REQUESTED FROM THE TOWN OF ORANGETOWN BUILDING DEPARTMENT UNTIL RESULTS OF INFILTRATION AND EXFILTRATION TESTS FOR SANITARY SEWERS ARE CERTIFIED BY A NEW YORK STATE LICENSED PROFESSIONAL ENGINEER AND APPROVED BY THE DIRECTOR, DIVISION OF SEWERS.

21. AT LEAST ONE WEEK PRIOR TO THE COMMENCEMENT OF ANY WORK, INCLUDING THE INSTALLATION OF EROSION CONTROL DEVICES OR THE REMOVAL OF TREES AND VEGETATION, A PRECONSTRUCTION MEETING MUST BE HELD WITH THE TOWN OF ORANGETOWN DEPARTMENT OF ENVIRONMENTAL MANAGEMENT AND ENGINEERING, SUPERINTENDENT OF HIGHWAYS AND THE OFFICE OF BUILDING, ZONING AND PLANNING ADMINISTRATION AND ENFORCEMENT. IT IS THE RESPONSIBILITY AND OBLIGATION OF THE PROPERTY OWNER TO ARRANGE SUCH A MEETING.

22. THE TREE PROTECTION AND PRESERVATION GUIDELINES ADOPTED PURSUANT TO SECTION 21-24 OF THE LAND DEVELOPMENT REGULATIONS OF THE TOWN OF ORANGETOWN WILL BE IMPLEMENTED IN ORDER TO PROTECT AND PRESERVE BOTH INDIVIDUAL SPECIMEN TREES AND BUFFER AREA WITH MANY TREES. STEPS THAT WILL BE TAKEN TO PRESERVE AND PROTECT EXISTING TREES TO REMAIN ARE AS FOLLOWS:

A) NO CONSTRUCTION EQUIPMENT SHALL BE PARKED UNDER THE TREE CANOPY.
B) THERE WILL BE NO EXCAVATION OR STOCKPILING OF EARTH UNDERNEATH THE TREES.
C) TREES DESIGNATED TO BE PRESERVED SHALL BE MARKED CONSPICUOUSLY ON ALL SIDES AT A 5 TO 10 FOOT HEIGHT.
D) THE TREE PROTECTION ZONE FOR TREES DESIGNATED TO BE PRESERVED WILL BE ESTABLISHED BY ONE OF THE FOLLOWING METHODS:

ONE (1) FOOT RADIUS FROM TRUNK PER INCH DBH.

DRIP LINE OF THE TREE CANOPY. THE METHOD CHOSEN SHOULD BE BASED ON PROVIDING THE MAXIMUM PROTECTION ZONE POSSIBLE. A BARRIER OF SNOW FENCE OR EQUAL IS TO BE PLACED AND MAINTAINED ONE YARD BEYOND THE ESTABLISHED TREE PROTECTION ZONE. IF IT IS AGREED THAT THE TREE PROTECTION ZONE OF A SELECTED TREE MUST BE VIOLATED, ONE OF THE FOLLOWING METHODS MUST BE EMPLOYED TO MITIGATE THE IMPACT:

LIGHT TO HEAVY IMPACTS – MINIMUM OF EIGHT INCHES OF WOOD CHIPS INSTALLED IN THE AREA TO BE PROTECTED. CHIPS SHALL BE REMOVED UPON COMPLETION OF WORK.

LIGHT IMPACTS ONLY – INSTALLATION OF 3/4 INCH OF PLYWOOD OR BOARDS, OR EQUAL OVER THE AREA TO BE PROTECTED.

THE BUILDER OR ITS AGENT MAY NOT CHANGE GRADE WITHIN THE TREE PROTECTION ZONE OF A PRESERVED TREE UNLESS SUCH GRADE CHANGE HAS RECEIVED FINAL APPROVAL FROM THE PLANNING BOARD. IF THE GRADE LEVEL IS TO BE CHANGED MORE THAN SIX (6) INCHES, TREES DESIGNATED TO BE PRESERVED SHALL BE WELLED AND/OR PRESERVED IN A RAISED BED, WITH THE TREE WELL A RADIUS OF THREE (3) FEET LARGER THAN THE TREE CANOPY.

23. ADDITIONAL CERTIFICATION, BY AN APPROPRIATE LICENSED OR CERTIFIED DESIGN PROFESSIONAL SHALL BE REQUIRED FOR ALL MATTERS BEFORE THE PLANNING BOARD INDICATING THAT THE DRAWINGS AND PROJECT ARE IN COMPLIANCE WITH THE STORMWATER MANAGEMENT PHASE II REGULATIONS.

24. PRIOR TO THE COMMENCEMENT OF ANY SITE WORK, INCLUDING THE REMOVAL OF TREES, THE APPLICANT SHALL INSTALL THE SOIL EROSION AND SEDIMENTATION CONTROL AS REQUIRED BY THE PLANNING BOARD. PRIOR TO THE AUTHORIZATION TO PROCEED WITH ANY PHASE OF THE SITE WORK, THE TOWN OF ORANGETOWN DEPARTMENT OF ENVIRONMENTAL MANAGEMENT AND ENGINEERING (DEME) SHALL INSPECT THE INSTALLATION OF ALL REQUIRED SOIL EROSION AND SEDIMENTATION CONTROL MEASURES. THE APPLICANT SHALL CONTACT DEME AT LEAST 48 HOURS IN ADVANCE FOR AN INSPECTION.

N.Y.S. INDUSTRIAL CODE RULE 753
1-800-962-7962
CALL BEFORE YOU DIG, DRILL OR BLAST
NO LESS THAN TWO WORKING DAYS NOTICE
IT'S THE LAW !

UNDERGROUND UTILITIES ARE SHOWN IN AN APPROXIMATE WAY FROM AVAILABLE INFORMATION. THE CONTRACTOR SHALL CALL THE LOCAL UNDERGROUND FACILITIES PROTECTIVE ORGANIZATION TO HAVE ALL UNDERGROUND UTILITIES MARKED IN THE FIELD PRIOR TO ANY CLEARING OR ANY CONSTRUCTION. THE CONTRACTOR SHALL ALSO VERIFY THE LOCATION, SIZE, AND INVERT OF ALL UTILITIES PRIOR TO ANY CONSTRUCTION. ANY UTILITY FOR WHICH NO EVIDENCE CAN BE SEEN ON THE SURFACE OF THE LANDS MAY NOT BE SHOWN ON THIS DRAWING.

OWNER OR REPRESENTATIVES APPROVAL FOR FILING	
OWNER OR REPRESENTATIVE	DATE

TREE LIST:

NUMBER	SIZE (IN)	SPECIES
1003	14	WALNUT
1004	24	OAK
1005	10	MAPLE
1006	8	MAPLE
1007	10	PINE
1009	11	MAPLE
1010	10	WALNUT
1011	13	HICKORY
1012	8	HICKORY
1013	10	HICKORY SHAGBK.
1014	8	HICKORY
1015	10	MAPLE
1016	12	MAPLE

TREE LEGEND

○ DENOTES ONSITE TREE TO REMAIN
⊗ DENOTES TREE TO BE REMOVED

SLOPE LEGEND:

SLOPE = 25%+

SLOPE 25%+
= 34,320

LOT AREA CALCULATION:

GROSS AREA	– 50% OF 25%+ SLOPE	NET AREA
38,692 SQ.FT.	17,160 SQ.FT.	21,532 SQ.FT.

LEGEND

- EXISTING 2' CONTOUR
- EXISTING 10' CONTOUR
- EXISTING WATERLINE
- EXISTING FIRE HYDRANT
- EXISTING GAS LINE
- CB EXISTING CATCH BASIN
- EXISTING STORM DRAIN LINE
- SMH EXISTING SEWER MANHOLE
- EXISTING SEWER LINE
- + 360.0 EXISTING SPOT ELEVATION
- EXISTING STONEWALL
- EXISTING SIGN
- LP EXISTING LIGHT POLE
- UP EXISTING UTILITY POLE
- TC TOP OF CURB
- DC DROP OF CURB
- TW TOP OF WALL
- BW BOTTOM OF WALL
- EXISTING TREE

VICINITY MAP
SCALE: 1"=200'

BULK REQUIREMENTS:

ZONE R-22 USE GROUP "I"	REQUIRED	EXISTING	PROPOSED
MAXIMUM FLOOR AREA RATIO	0.20	–	–
MINIMUM LOT AREA	22,500 SQ.FT.	21,532 SQ.FT. (NET)	21,532 SQ.FT. (NET)
MINIMUM LOT WIDTH	125 FT.	134 FT.	134 FT.
MINIMUM STREET FRONTAGE	75 FT.	138 FT.	138 FT.
MINIMUM FRONT YARD	40 FT.	0 FT. *	0 FT. *
MINIMUM SIDE YARD	25 FT.	15 FT. *	15 FT. *
MINIMUM TOTAL SIDE YARD	60 FT.	41.2 FT. *	41.2 FT. *
MINIMUM REAR YARD	45 FT.	232 FT.	232 FT.
MAXIMUM BUILDING HEIGHT	9 IN./FT. FROM DESIGNATED STREET LINE	16 FT. *	16 FT. *

* EXISTING NON-COMFORMING
** VARIANCE REQUIRED FROM ZONING BOARD OF APPEALS

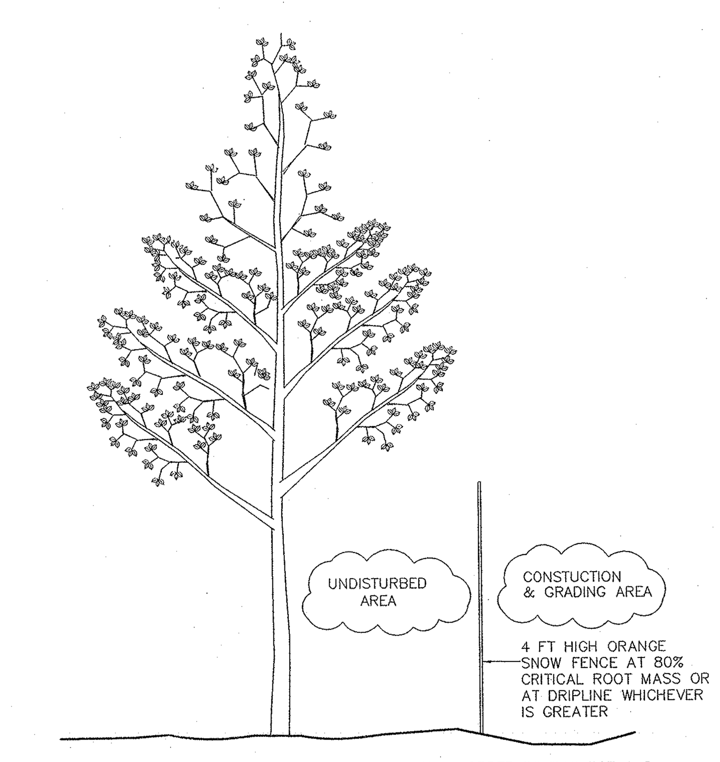

A TREE PROTECTION PROGRAM WILL BE IMPLEMENTED IN ORDER TO PROTECT AND PRESERVE BOTH INDIVIDUAL SPECIMEN TREES AND BUFFER AREAS WITH MANY TREES. STEPS WHICH WILL BE TAKEN TO PRESERVE AND PROTECT EXISTING TREES, ARE AS FOLLOWS:

TREE PROTECTION DETAIL

N.T.S.

NOTES:
A) NO CONSTRUCTION EQUIPMENT SHALL BE PARKED UNDER THE TREE CANOPY.
B) THERE WILL BE NO EXCAVATION OR STOCKPILING OF EARTH UNDERNEATH THE TREES.
C) TREES TO BE PRESERVED SHALL BE MARKED CONSPICUOUSLY ON ALL SIDES.
D) TREES TO BE SAVED ARE TO BE PROTECTED WITH A 4 FOOT HIGH ORANGE SNOW FENCE PLACED AT THE DRIP LINE OR AT 80% CRITICAL ROOT MASS WHICHEVER IS GREATER.
E) NO EARTH FILLS GREATER THAN 6" IN DEPTH WILL BE MADE BENEATH TREES TO BE PRESERVED.
F) IN FILL AREAS, TREES WILL BE PRESERVED IN TREE WELLS OR THROUGH THE USE OF RETAINING WALLS PLACED AT THE DRIP LINE OR AT 80% CRITICAL ROOT MASS WHICHEVER IS GREATER.
G) IN CUT AREAS, TREES WILL BE PRESERVED WITH RETAINING WALLS AT THE DRIP LINE OR AT 80% CRITICAL ROOT MASS WHICHEVER IS GREATER.

OWNER & APPLICANT

119 TWEED BLVD., LLC
150 WHITE PLAINS RD.
TARRYTOWN, NY 10591

TAX MAP REFERENCE

TOWN OF ORANGETOWN
SECTION 71.17, BLOCK 1, LOT 19

LOT AREA:

38,692 SQ.FT.

SUBDIVISION REFERENCE:

SUBDIVISION ENTITLED "SCOTCH HILL ACRES" FILED IN ROCKLAND COUNTY CLERK'S OFFICE ON AUGUST 9, 1983, BOOK 100, PAGE 55, MAP NO. 5523.

SITE ADDRESS:

119 TWEED BOULEVARD
NYACK, NY 10960

DISTRICTS:

SCHOOL DISTRICT – NYACK UNION FREE SCHOOL DISTRICT
FIRE DISTRICT – UPPER GRANDVIEW
WATER DISTRICT – UPPER GRANDVIEW
SEWER DISTRICT – ORANGETOWN SEWER DISTRICT
LIGHTING DISTRICT – UPPER GRANDVIEW

THE EDUCATION LAW OF THE STATE OF NEW YORK PROHIBITS ANY PERSON ALTERING ANYTHING ON THESE DRAWINGS AND/OR THE ACCOMPANYING SPECIFICATIONS, UNLESS IT IS UNDER THE DIRECTION OF A LICENSED PROFESSIONAL ENGINEER. WHERE SUCH ALTERATIONS ARE MADE, THE PROFESSIONAL ENGINEER MUST SIGN, SEAL, DATE AND DESCRIBE THE FULL EXTENT OF THE ALTERATION ON THE DRAWINGS AND/OR IN THE SPECIFICATIONS. (NYS EDUCATION LAW SECTION 7209-2)

"UNAUTHORIZED ALTERATIONS OR ADDITIONS TO A SURVEY MAP BEARING A LICENSED LAND SURVEYOR'S EMBOSSED SEAL IS A VIOLATION OF SECTION 7209, SUBDIVISION 2, OF THE NEW YORK STATE EDUCATION LAW."
"ONLY COPIES FROM THE ORIGINAL TRACING OF THIS SURVEY MAP MARKED WITH THE LAND SURVEYOR'S EMBOSSED SEAL SHALL BE CONSIDERED TO BE VALID TRUE COPIES."
"CERTIFICATION INDICATED HERE ON SIGNIFY THAT THIS SURVEY WAS PREPARED IN ACCORDANCE WITH THE EXISTING CODE OF PRACTICE FOR LAND SURVEYOR'S ADOPTED BY THE DELAWARE – HUDSON LAND SURVEYORS ASSOCIATION. SAID CERTIFICATIONS SHALL RUN ONLY TO THOSE NAMED INDIVIDUALS AND/OR INSTITUTIONS FOR WHOM THE SURVEY WAS PREPARED. CERTIFICATIONS ARE NOT TRANSFERABLE TO ADDITIONAL INDIVIDUALS, INSTITUTIONS, THEIR SUCCESSORS AND/OR ASSIGNS OR SUBSEQUENT OWNERS."

STATE OF NEW YORK – RYAN A. NASHER – PROFESSIONAL ENGINEER
RYAN A. NASHER, P.E.
N.Y.S. P.E. LIC. NO. 89066

STATE OF NEW YORK – JOHN R. ATZL
JOHN R. ATZL
N.Y.S. P.L.S. LIC. NO. 50228

REVISION	DATE	DESCRIPTION
4	09-22-20	WALL DESIGN REVISED PER OWNER
3	07-17-20	PER MARTOS ENGINEERING COMMENTS
2	07-07-20	PER TOWN COMMENTS 07-01-20
1	06-29-20	PER PB MTG 06-01-20

ATZL, NASHER & ZIGLER P.C.
ENGINEERS–SURVEYORS–PLANNERS
232 North Main Street
New City, New York 10956
Tel: (845) 634-4694
Fax: (845) 634-5543
E-mail: info@anzny.com
Web: www.ANZNY.com

PROJECT:
119 TWEED BLVD., LLC

TOWN OF ORANGETOWN
ROCKLAND COUNTY, NEW YORK

TITLE:
SITE DEVELOPMENT PLAN

DRAWN BY: LK	CHECKED BY: JRA
DATE: JANUARY 22, 2020	SCALE: 1 IN. = 20 FT.
PROJECT NO: 4692	DRAWING NO: 2

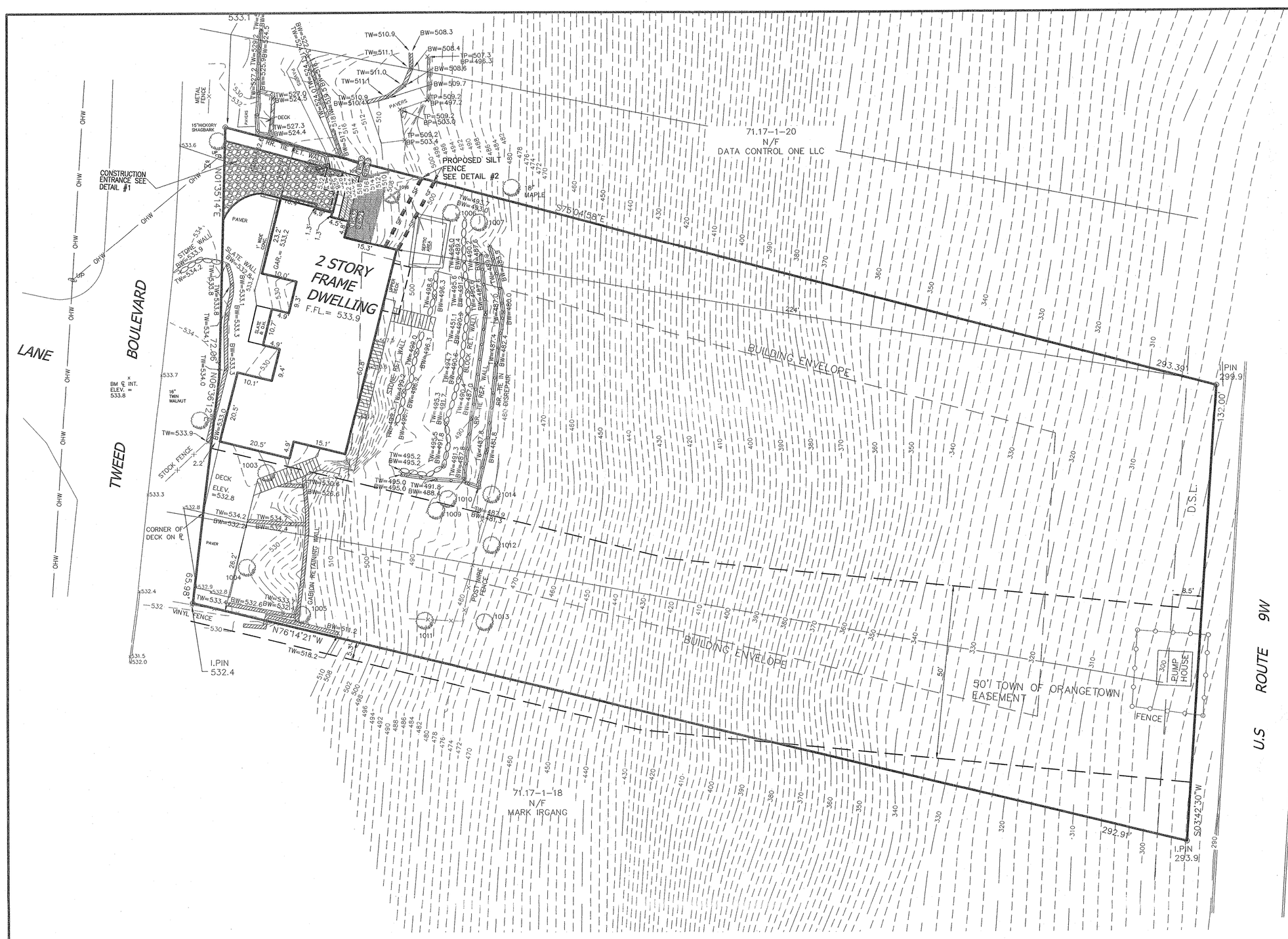

SPECIFICATIONS FOR CONSTRUCTION ENTRANCE

1. STONE SIZE – USE 2" STONE, OR RECLAIMED OR RECYCLED CONCRETE EQUIVALENT.
2. LENGTH – NOT LESS THAN 50 FT. (EXCEPT ON A SINGLE RESIDENCE LOT WHERE A 30 FT. MINIMUM LENGTH WOULD APPLY).
3. THICKNESS – NOT LESS THAN 6 IN..
4. WIDTH – 12 FT. MINIMUM, BUT NOT LESS THAN THE FULL WIDTH AT POINTS WHERE INGRESS AND EGRESS OCCUR. 24 FT. IF SINGLE ENTRANCE TO SITE.
5. FILTER CLOTH – WILL BE PLACED OVER THE ENTIRE AREA PRIOR TO THE PLACEMENT OF STONE.
6. SURFACE WATER – ALL SURFACE WATER FLOWING OR DIVERTED TOWARD CONSTRUCTION ENTRANCES SHALL BE PIPED ACROSS THE ENTRANCE. IF PIPING IS IMPRACTICAL, A MOUNTABLE BERM WITH 5:1 SLOPES WILL BE PERMITTED.
7. MAINTENANCE – THE ENTRANCE SHALL BE MAINTAINED IN A CONDITION WHICH WILL PREVENT TRACKING OR FLOWING OF SEDIMENT ONTO PUBLIC RIGHT-OF-WAYS. ALL SEDIMENT SPILLED, DROPPED, WASHED, OR TRACKED ONTO PUBLIC RIGHT-OF-WAYS MUST BE REMOVED IMMEDIATELY.
8. WHEN WASHING IS REQUIRED, IT SHALL BE DONE ON AN AREA STABILIZED WITH STONE AND WHICH DRAINS TO AN APPROVED SEDIMENT TRAPPING DEVICE.
9. PERIODIC INSPECTION AND NEEDED MAINTENANCE SHALL BE PROVIDED AFTER EACH RAIN.

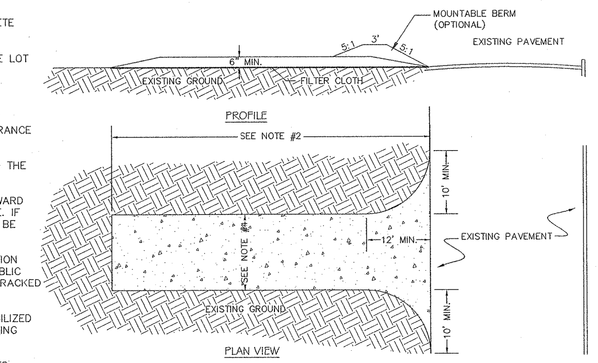

DETAIL #1 CONSTRUCTION ENTRANCE

N.T.S.

CONSTRUCTION NOTES FOR PRE FABRICATED SILT FENCE

PREFABRICATED UNIT: GEOFAB, ENVROFENCE, OR APPROVED EQUAL

1. WHEN TWO SECTIONS OF FILTER CLOTH ADJOIN EACH OTHER THEY SHALL BE OVERLAPPED BY SIX INCHES AND FOLDED.
2. MAINTENANCE SHALL BE PERFORMED AS NEEDED AND MATERIAL REMOVED WHEN "BULGES" DEVELOP IN THE SILT FENCE.

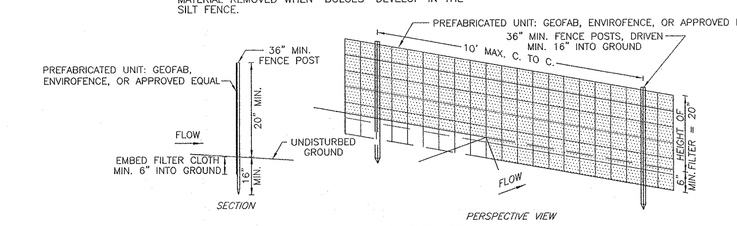

DETAIL #2 SILT FENCE

N.T.S.

SEDIMENT & EROSION CONTROL NOTES:

1. FABRIC FENCE WILL BE INSTALLED ALONG DOWN-HILL SIDE OF ADJACENT PROPERTY OWNERS AND ALONG ALL DISTURBED AREAS.
2. TEMPORARY SEEDING SHALL BE APPLIED TO DISTURBED AREAS THAT ARE LEFT BARE FOR 15 DAYS UNLESS CONSTRUCTION WILL BE BEGIN WITHIN 30 DAYS. IF CONSTRUCTION IS SUSPENDED OR COMPLETED, AREAS SHALL BE SEEDED OR MULCHED IMMEDIATELY.
3. STRUCTURAL MEASURES MUST BE MAINTAINED TO BE EFFECTIVE. IN GENERAL, THESE MEASURES MUST BE PERIODICALLY INSPECTED TO INSURE STRUCTURAL INTEGRITY, DETECT VANDALISM DAMAGE, AND FOR MAINTENANCE AND REPAIR WHENEVER NECESSARY.
4. A STABILIZED CONSTRUCTION ENTRANCE SHALL BE INSTALLED AT THE BEGINNING OF THE PROPOSED ROAD.
5. MACADAM SURFACES SHALL BE SWEPT "BROOM CLEAN" AT THE END OF EACH DAY DURING CONSTRUCTION.
6. CONSTRUCTION EQUIPMENT SHALL BE LIMITED TO AREAS WITHIN THE SILT FENCE SEDIMENT PROTECTION AREA.

LEGEND

362	EXISTING 2' CONTOUR
360	EXISTING 10' CONTOUR
W	EXISTING WATERLINE
	EXISTING FIRE HYDRANT
G	EXISTING GAS LINE
CB	EXISTING CATCH BASIN
	EXISTING STORM DRAIN LINE
SMH	EXISTING SEWER MANHOLE
	EXISTING SEWER LINE
+ 260.0'	EXISTING SPOT ELEVATION
	EXISTING STONEWALL
	EXISTING SIGN
LP	EXISTING LIGHT POLE
UP	EXISTING UTILITY POLE
TC	TOP OF CURB
DC	DROP OF CURB
TW	TOP OF WALL
BW	BOTTOM OF WALL
	EXISTING TREE

THE EDUCATION LAW OF THE STATE OF NEW YORK PROHIBITS ANY PERSON ALTERING ANYTHING ON THESE DRAWINGS AND/OR THE ACCOMPANYING SPECIFICATIONS, UNLESS IT IS UNDER THE DIRECTION OF A LICENSED PROFESSIONAL ENGINEER. WHERE SUCH ALTERATIONS ARE MADE, THE PROFESSIONAL ENGINEER MUST SIGN, SEAL, DATE AND DESCRIBE THE FULL EXTENT OF THE ALTERATION ON THE DRAWINGS AND/OR IN THE SPECIFICTIONS. (NYS EDUCATION LAW SECTION 7209-2)

"UNAUTHORIZED ALTERATIONS OR ADDITIONS TO A SURVEY MAP BEARING A LICENSED LAND SURVEYOR'S EMBOSSED SEAL IS A VIOLATION OF SECTION 7209, SUBDIVISION 2, OF THE NEW YORK STATE EDUCATION LAW."
"ONLY COPIES FROM THE ORIGINAL TRACING OF THIS SURVEY MAP MARKED WITH THE LAND SURVEYOR'S EMBOSSED SEAL SHALL BE CONSIDERED TO BE VALID TRUE COPIES."
"CERTIFICATION INDICATED HERE ON SIGNIFY THAT THIS SURVEY WAS PREPARED IN ACCORDANCE WITH THE EXISTING CODE OF PRACTICE FOR LAND SURVEYOR'S ADOPTED BY THE DELAWARE – HUDSON LAND SURVEYORS ASSOCIATION. SAID CERTIFICATIONS SHALL RUN ONLY TO THOSE NAMED INDIVIDUALS AND/OR INSTITUTIONS FOR WHOM THE SURVEY WAS PREPARED. CERTIFICATIONS ARE NOT TRANSFERABLE TO ADDITIONAL INDIVIDUALS, INSTITUTIONS, THEIR SUCCESSORS AND/OR ASSIGNS OR SUBSEQUENT OWNERS."

STATE OF NEW YORK · RYAN A. NASHER · 089066 · LICENSED PROFESSIONAL ENGINEER

RYAN A. NASHER, P.E.
N.Y.S. P.E. LIC. NO. 89066

STATE OF NEW YORK · JOHN R. ATZL · 50228 · LICENSED LAND SURVEYOR

JOHN R. ATZL
N.Y.S. L.S. LIC. NO. 50228

REVISION	DATE	DESCRIPTION
4	09-22-20	WALL DESIGN REVISED PER OWNER
3	07-17-20	PER MARTOS ENGINEERING COMMENTS
2	07-07-20	PER TOWN COMMENTS 07-01-20
1	06-29-20	PER PB MTG 06-01-20

ATZL, NASHER & ZIGLER P.C.
ENGINEERS-SURVEYORS-PLANNERS
232 North Main Street
New City, New York 10956
Tel: (845) 634-4694
Fax: (845) 634-5543
E-mail: info@anzny.com
Web: www.ANZNY.com

PROJECT:

119 TWEED BLVD., LLC

TOWN OF ORANGETOWN
ROCKLAND COUNTY, NEW YORK

TITLE:

EROSION & SEDIMENT CONTROL PLAN

DRAWN BY: MM	CHECKED BY: JRA
DATE: JANUARY 22, 2020	SCALE: 1 IN. = 20 FT.
PROJECT NO: 4692	DRAWING NO: 3

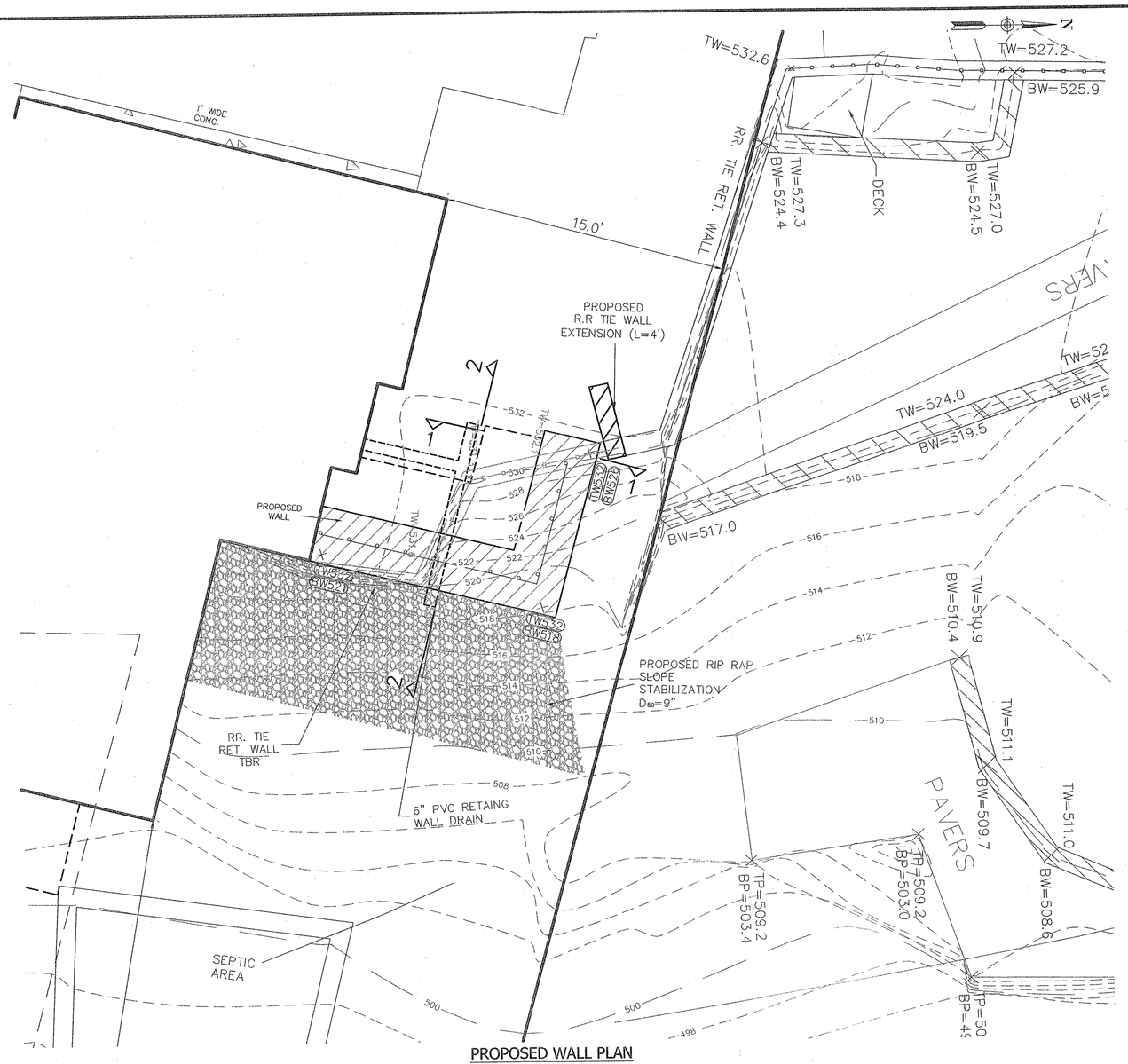

PROPOSED WALL PLAN

SCALE: 1"=5'

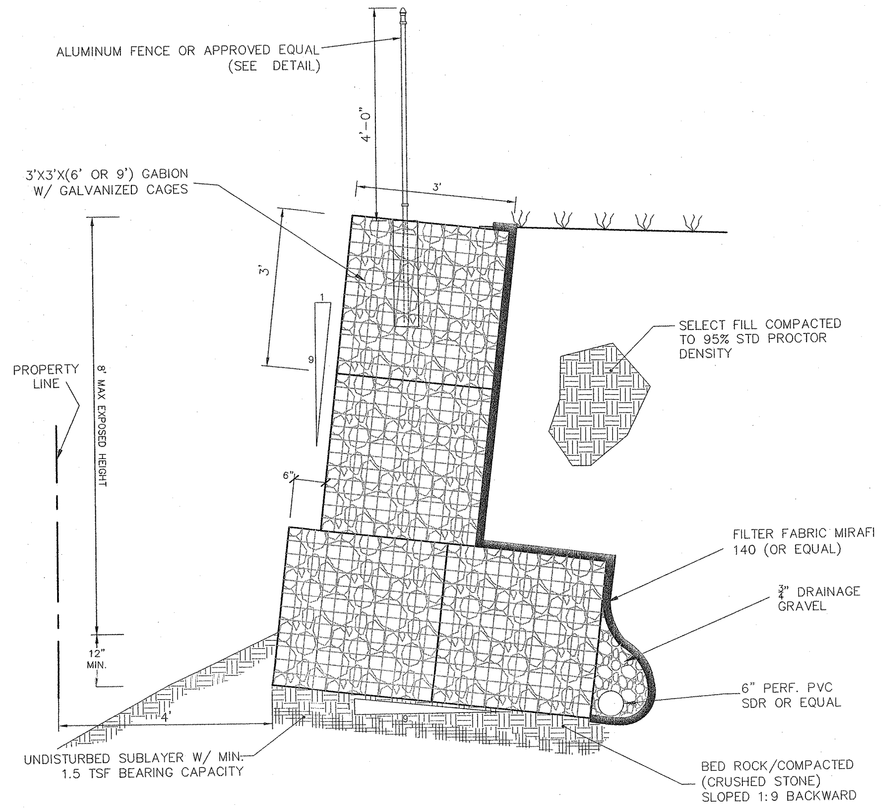

SECTION 1-1: MAX STRENGTH GABION WALL SECTION

SCALE: 1"=2'

LEGEND

362	EXISTING 2' CONTOUR
360	EXISTING 10' CONTOUR
W	EXISTING WATERLINE
	EXISTING FIRE HYDRANT
G	EXISTING GAS LINE
CB	EXISTING CATCH BASIN
	EXISTING STORM DRAIN LINE
SMH	EXISTING SEWER MANHOLE
	EXISTING SEWER LINE
+ 360.0	EXISTING SPOT ELEVATION
	EXISTING STONEWALL
	EXISTING SIGN
LP	EXISTING LIGHT POLE
UP	EXISTING UTILITY POLE
TC	TOP OF CURB
DC	DROP OF CURB
TW	TOP OF WALL
BW	BOTTOM OF WALL
	EXISTING TREE

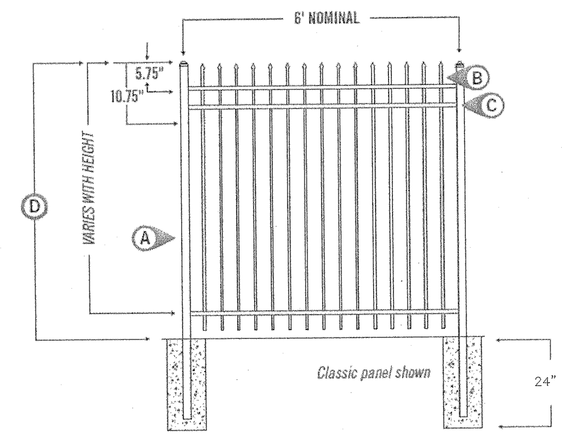

A 2"SQ X .060" WALL POSTS
B 0.590"SQ X .050" WALL PICKETS
C 1.125"WX1"H (0.072" SIDE/0.55" TOP)
D 4' PANEL HEIGHTS

TYP. ALUMINUM FENCE DETAIL

N.T.S.

EXISTING WALL PLAN

SCALE: 1"=5'

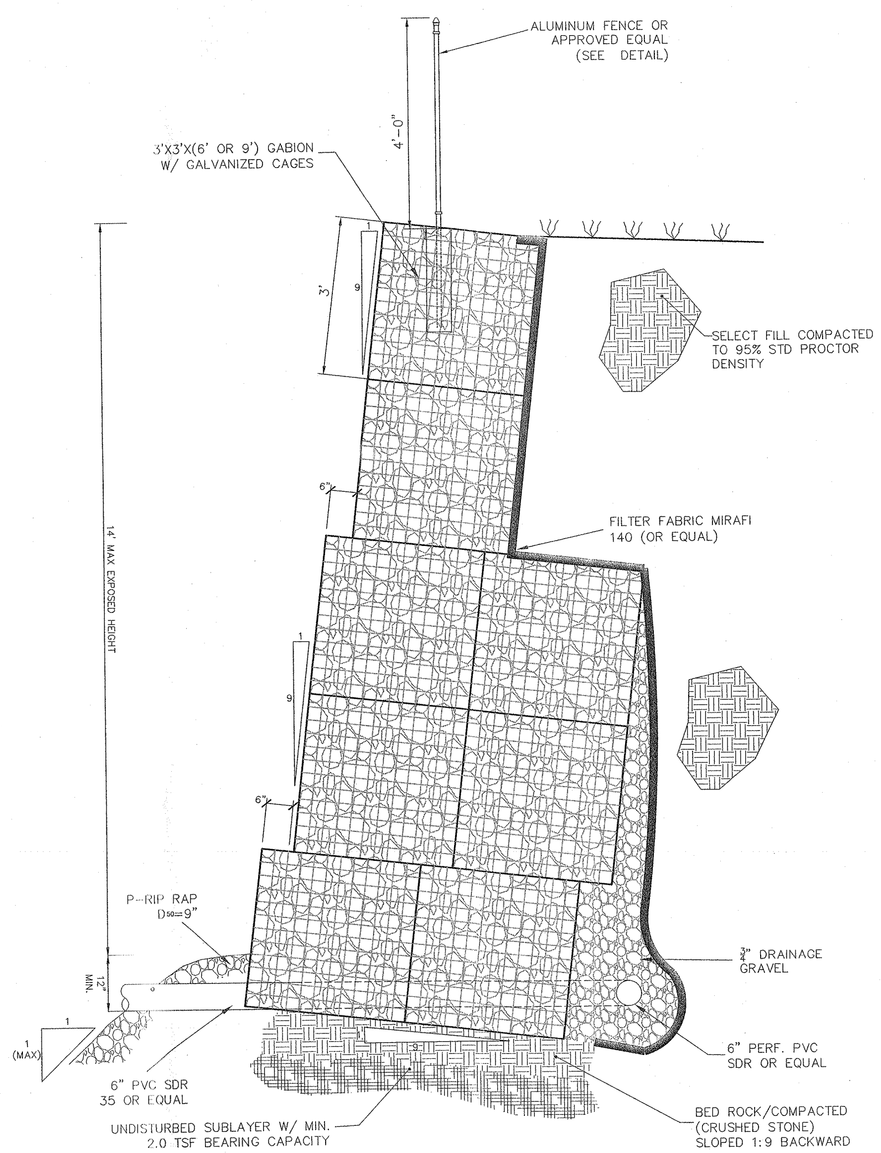

SECTION 2-2: MAX STRENGTH GABION WALL SECTION

SCALE: 1"=2'

REVISION	DATE	DESCRIPTION
4	09-22-20	WALL DESIGN REVISED PER OWNER
3	07-17-20	PER MARTOS ENGINEERING COMMENTS
2	07-07-20	PER TOWN COMMENTS 07-01-20
1	06-29-20	PER PB MTG 06-01-20

ATZL, NASHER & ZIGLER P.C.
ENGINEERS-SURVEYORS-PLANNERS
232 North Main Street
New City, New York 10956
Tel: (845) 634-4694
Fax: (845) 634-5543
E-mail: info@anzny.com
Web: www.ANZNY.com

PROJECT:

119 TWEED BLVD., LLC

TOWN OF ORANGETOWN
ROCKLAND COUNTY, NEW YORK

TITLE:

RETAINING WALL PLAN & DETAILS

DRAWN BY: LK	CHECKED BY: VR
DATE: JANUARY 22, 2020	SCALE: AS SHOWN
PROJECT NO: 4692	DRAWING NO: 4

THE EDUCATION LAW OF THE STATE OF NEW YORK PROHIBITS ANY PERSON ALTERING ANYTHING ON THESE DRAWINGS AND/OR THE ACCOMPANYING SPECIFICATIONS, UNLESS IT IS UNDER THE DIRECTION OF A LICENSED PROFESSIONAL ENGINEER. WHERE SUCH ALTERATIONS ARE MADE, THE PROFESSIONAL ENGINEER MUST SIGN, SEAL, DATE AND DESCRIBE THE FULL EXTENT OF THE ALTERATION ON THE DRAWINGS AND/OR IN THE SPECIFICTIONS. (NYS EDUCATION LAW SECTION 7209-2)

"UNAUTHORIZED ALTERATIONS OR ADDITIONS TO A SURVEY MAP BEARING A LICENSED LAND SURVEYOR'S EMBOSSED SEAL IS A VIOLATION OF SECTION 7209, SUBDIVISION 2, OF THE NEW YORK STATE EDUCATION LAW."
"ONLY COPIES FROM THE ORIGINAL TRACING OF THIS SURVEY MAP MARKED WITH THE LAND SURVEYOR'S EMBOSSED SEAL SHALL BE CONSIDERED TO BE VALID TRUE COPIES."
"CERTIFICATION INDICATED HERE ON SIGNIFY THAT THIS SURVEY WAS PREPARED IN ACCORDANCE WITH THE EXISTING CODE OF PRACTICE FOR LAND SURVEYOR'S ADOPTED BY THE DELAWARE – HUDSON LAND SURVEYORS ASSOCIATION. SAID CERTIFICATIONS SHALL RUN ONLY TO THOSE NAMED INDIVIDUALS AND/OR INSTITUTIONS FOR WHOM THE SURVEY WAS PREPARED. CERTIFICATIONS ARE NOT TRANSFERABLE TO ADDITIONAL INDIVIDUALS, INSTITUTIONS, THEIR SUCCESSORS AND/OR ASSIGN'S OR SUBSEQUENT OWNERS."

STATE OF NEW YORK · RYAN A. NASHER · 089066 · LICENSED PROFESSIONAL ENGINEER

RYAN A. NASHER, P.E.
N.Y.S. P.E. LIC. NO. 89066

STATE OF NEW YORK · JOHN R. ATZL · 50228 · LICENSED PROFESSIONAL SURVEYOR

JOHN R. ATZL
N.Y.S. P.L.S. LIC. NO. 50228

GENERAL CONSTRUCTION CONDITIONS

1. THE TERM OF OWNER AS USED IN THESE SPECIFICATIONS AND NOTES SHALL INCLUDE THE OWNER OF THE PROPERTY, THE COMPANY OR PARTY THAT HIRED THE CONTRACTOR, THE COMPANY OR PARTY THAT SIGNED THE CONTRACT FOR THIS WORK AND THE AGENTS OF EACH. THE OWNER'S REPRESENTATIVE SHALL BE THE INDIVIDUAL OR PARTY ASSIGNED BY THE OWNER TO BE THE OWNER'S REPRESENTATIVE.

2. THE OWNER SHALL BE RESPONSIBLE FOR ALL TEMPORARY PERMITS, CONNECTION PERMITS, FEES, INSPECTIONS AND RECORD KEEPING REQUIRED BY ALL MUNICIPAL, UTILITY, HEALTH, ENVIRONMENTAL, STATE OR FEDERAL AGENCIES THAT MAY HAVE JURISDICTION. FURTHERMORE, THE OWNER SHALL BE RESPONSIBLE TO MEET OR EXCEED ALL REQUIREMENTS OF THE AGENCIES OR AUTHORITIES HAVING JURISDICTON OVER HIS WORK. ALL CONFLICTS IN REQUIREMENTS OF DIFFERENT AGENCIES, AUTHORITIES AND/OR THE DESIGN SHALL BE BROUGHT TO THE ATTENTION OF THE OWNERS' REPRESENTATIVE BEFORE PROCEEDING.

3. THE CONTRACTOR SHALL BE RESPONSIBLE TO LOCATE AND MAINTAIN THE PROPERTY AND PROJECT LIMITS THROUGH OUT THE PROJECT. ALL CONFLICTS BETWEEN THE DESIGN AND THE PROJECT / PROPERTY LIMITS SHALL BE BROUGHT TO THE ATTENTION OF THE OWNER'S REPRESENTATIVE BEFORE PROCEEDING. UNLESS DESCRIBED IN THE CONTRACT DOCUMENTS OR SHOWN ON THE DRAWINGS THE OWNER HAS NOT SECURED ANY RIGHT OF WAYS, EASEMENTS OR AGREEMENTS WITH OTHER PROPERTY OWNERS OR PROPERTY USERS. THEREFORE IT SHALL BE THE CONTRACTORS RESPONSIBILITY TO SECURE AND MAINTAIN ANY TEMPORARY RIGHT OF WAYS, EASEMENTS, PERMITS OR AGREEMENTS HE MAY NEED TO PERFORM HIS WORK. ALL SUCH AGREEMENTS SHALL HOLD THE OWNER, ENGINEER AND HIS AGENTS HARMLESS AND IT SHALL BE THE RESPONSIBILITY OF THE CONTRACTOR TO BEAR ALL COSTS. THE CONTRACTOR SHALL COPY THE OWNER ON RELEASES OF ALL AGREEMENTS PRIOR TO FINAL PAYMENT BY THE OWNER TO THE CONTRACTOR.

4. UNLESS OTHERWISE NOTED ON THE DRAWINGS OR IN THE CONTRACT DOCUMENTS THE CONTRACTOR SHALL BE RESPONSIBLE FOR ALL CONSTRUCTION SURVEY, LAYOUT AND RECORD DRAWINGS FOR THIS CONTRACT. ANY CONFLICTS IN SURVEY/LAYOUT AND THE DESIGN OR AGENCIES REQUIREMENTS SHALL BE BROUGHT TO THE ATTENTION OF THE OWNER'S REPRESENTATIVE PRIOR TO PROCEEDING WITH THE WORK. THE CONTRACTOR SHALL PROTECT AND SAFEGUARD ALL EXISTING SURVEY MONUMENTS, CONTROL AND TIE-DOWNS. THE CONTRACTOR SHALL BE RESPONSIBLE FOR ALL COST ASSOCIATED WITH ERRORS IN THE STAKE-OUT AND LOCATION OF HIS WORK. THE CONTRACTOR SHALL PAY ALL COSTS TO REPAIR OR REPLACE DAMAGED SURVEY MONUMENTS, CONTROL AND TIE-DOWNS.

5. NO CHANGES TO THE DESIGN OR MATERIALS SPECIFIED MAY BE MADE WITHOUT WRITTEN AUTHORIZATION BY THE ENGINEER OR IN THE CASE OF UTILITIES OR ROAD WORK TO BE DEDICATED, THE AUTHORITY RECEIVING DEDICATION. THE CONTRACTOR SHALL PROVIDE TO THE OWNER AT THE END OF THE CONTRACT A RECORD SET OF DRAWING REFLECTING ALL CHANGES MADE BY THE CONTRACTOR DURING CONSTRUCTION.

6. EROSION CONTROL IS NECESSARY WHEN SEDIMENT, DUST, EROSION, OR CONTAMINATED RUN-OFF MAY OCCUR. THE CONTRACTOR SHALL BE RESPONSIBLE TO PLACE AND MAINTAIN EROSION CONTROL OR RUN-OFF PROTECTION AS REQUIRED TO PROTECT HIS WORK, THE WORK OF HIS SUBCONTRACTORS, OR OTHER PARTIES ASSOCIATED WITH THE PROJECT, ADJACENT PROPERTIES AND THE HEALTH AND WELL BEING OF THE WORKERS, PUBLIC AND SURROUNDING NATURAL RESOURCES. THE CONTRACTOR SHALL BE FAMILIAR WITH ALL FEDERAL, STATE AND LOCAL REQUIREMENTS REGARDING EROSION AND RUN-OFF CONTROL AND SHALL SIGN A CERTIFICATION STATEMENT INDICATING THAT HE UNDERSTANDS AND WILL COMPLY WITH THE SITE'S STORM WATER POLLUTION PREVENTION PLAN IF ONE WAS PREPARED FOR THE PROJECT.

7. THE CONTRACTOR SHALL BE FAMILIAR WITH THE PROJECT SITE AND ALL ADJACENT PEDESTRIAN, TRAFFIC AND BUSINESS USES. THE CONTRACTOR SHALL TAKE WHAT EVER PRECAUTIONS AND STEPS NECESSARY TO MAINTAIN SAFETY AND OPERATION OF THESE USES IN ACCORDANCE WITH FEDERAL, STATE, COUNTY AND LOCAL REQUIREMENTS. THE CONTRACTOR SHALL BE RESPONSIBLE FOR COSTS AND DAMAGES CAUSED FROM HIS FAILURE TO TAKE PROPER AND ADEQUATE PRECAUTIONS. THE CONTRACTOR SHALL BE FAMILIAR WITH ALL FEDERAL, STATE AND LOCAL REQUIREMENTS REGARDING THESE USES INCLUDING BUT NOT LIMITED TO THE MAINTENANCE AND PROTECTION OF TRAFFIC REQUIRED BY THE NEW YORK STATE DEPARTMENT OF TRANSPORTATION (NYS D.O.T.) AND CORRESPONDING TOWN.

8. THE CONTRACTOR SHALL BE RESPONSIBLE FOR COSTS AND DELAYS ASSOCIATED WITH WEATHER, GROUNDWATER, AND OTHER OCCURRENCES THAT COULD BE EXPECTED OR ARE COMMON WITH THIS TYPE WORK. THE CONTRACTOR SHALL REVIEW ALL PERTINENT DOCUMENTS INCLUDING SOILS REPORTS, SOILS BORINGS AND OTHER SOIL OR SITE DATA.

9. THE CONTRACTOR SHALL BE RESPONSIBLE TO SAVE AND PROTECT HIS WORK THROUGH OUT THE CONTRACT. ANY DAMAGES REQUIRING REPAIRS OR REPLACEMENT SHALL BE CORRECTED BY THE CONTRACTOR AT HIS EXPENSE.

10. WHEN WORK IS DONE WITHIN A ROAD, UTILITY OR PRIVATE EASEMENT, RIGHT OF WAY OR OTHER PROPERTY AGREEMENT THE CONTRACTOR SHALL DO ALL WORK WITHIN THAT AREA PER THE AUTHORITY HAVING JURISDICTION.

11. ALL EXISTING UTILITIES ARE SHOWN PER SURFACE SURVEYS AND/OR RECORD MAPS AND MAY VARY FROM ACTUAL IN FIELD LOCATIONS. THE CONTRACTOR IS RESPONSIBLE FOR ALL UTILITY STAKE OUTS AND LOCATING UTILITIES PRIOR TO COMMENCING WORK. ANY DAMAGE TO UTILITIES DUE TO IMPROPER STAKE OUT, LACK OF STAKE OUT OR THE FAILURE TO VERIFY DIFFERENCES BETWEEN DRAWINGS AND ACTUAL FIELD CONDITIONS WILL BE THE RESPONSIBILITY OF THE CONTRACTOR TO REPAIR, REPLACE OR PAY DAMAGES AT NO EXPENSE TO THE CONTRACT.

12. CONTRACTOR SHALL FURNISH AND APPLY WATER AND/OR CALCIUM CHLORIDE AS NECESSARY TO CORRECT DUSTY CONDITIONS RESULTING FROM LOCAL TRAFFIC ON THE STREET OR CONTRACTORS OPERATIONS.

EARTHWORK

1. PRIOR TO STARTING ANY CUTS OR FILLS THE CONTRACTOR SHALL STRIP AND STOCKPILE ALL TOPSOIL. STRIPPING OF TOPSOIL CAN ONLY COMMENCE AFTER THE CLEAR AND GRUB OPERATIONS ARE COMPLETE IN THAT AREA. TOPSOIL SHALL BE STOCKPILED IN AREAS DESIGNATED ON THE PLANS OR APPROVED BY THE OWNER'S REPRESENTATIVE. THE CONTRACTOR SHALL REVIEW THE SOILS REPORTS, BORING LOGS AND WHEN NECESSARY HIS OWN FIELD VERIFICATION SO AS TO BE FAMILIAR WITH THE DEPTH OF TOPSOIL. THE CONTRACTOR SHALL TAKE ALL REASONABLE PRECAUTIONS TO PREVENT OVER AND UNDER REMOVAL OF TOPSOIL.

2. UNLESS OTHERWISE NOTED ON THE DRAWINGS OR IN THE CONTRACT DOCUMENTS THE CONTRACTOR SHALL RETAIN AND PAY ALL COST FOR SOIL COMPACTING TESTING TO BE PERFORMED BY AN INDEPENDENT TESTING LABORATORY. TESTING FOR COMPACTION SHALL BE DONE EVERY 2000 SQ. FT. EACH LIFT. IN TRENCHES COMPACTION TESTING SHALL BE DONE EVERY 100 LF. EVERY OTHER LIFT, BUT NOT LESS THAN 1 TEST EVERY OTHER LIFT.

3. COMPACTION REQUIREMENTS SHALL BE THOSE OUTLINED IN THE PLAN. IF THE PLAN IS NOT CLEAR OR DOES NOT GIVE REQUIREMENTS THE FOLLOWING WILL BE USED. THE SUBGRADE SOILS AND BACK FILL AREA SHALL BE COMPACTED TO A MINIMUM OF 95% MAXIMUM DRY DENSITY PER ASTM 01557 (MODIFIED PROCTOR). ALL LANDSCAPE AND LAWN AREAS SHALL BE COMPACTED TO 90% MAXIMUM DRY DENSITY PER ASTM 01557 (MODIFIED PROCTOR). THE TESTING LAB SHALL TEST SOILS IN ACCORDANCE WITH ASTM 02922 (NUCLEAR METHOD) WITH PROCTORS FOR EACH SOIL TYPE.

4. UNLESS OTHERWISE NOTED IN THE SOILS REPORT OR ON THE DRAWINGS THE ON SITE MATERIAL SHALL BE USED TO MAKE FILLS. ALL MATERIAL TO BE USED FOR FILL SHALL BE FREE OF ORGANICS, FROZEN MATERIAL, CONTAMINATED MATERIAL, DEBRIS AND ANY ROCKS LARGER THAN 4 INCHES. FOR FILL PLACED WITHIN 1 FOOT OF SUBGRADE NO ROCK SHALL BE GREATER THAN 2 INCHES IN DIAMETER. THE CONTRACTOR SHALL BEAR ALL COST ASSOCIATED WITH DRYING, SEGREGATING OR OTHER REQUIRED METHODS TO TREAT SOILS TO MEET COMPACTION AND OTHER REQUIREMENTS.

5. BACKFILLS SHALL BE PLACED IN LIFTS NOT TO EXCEED 8 INCH.

6. IF IMPORTED MATERIAL IS REQUIRED THE SOURCE AND A RANDOM COMPOSITE SAMPLE SHALL BE REVIEWED BY THE TESTING LABORATORY PRIOR TO BEING BROUGHT TO SITE. IMPORTED MATERIAL SHALL HAVE 100% PASSING THE 3 INCH SIEVE FOR FILL UP TO 1 FOOT OF SUBGRADE AND 100% PASSING THE 2 INCH SIEVE FOR FILLS WITHIN 1 FOOT OF SUBGRADE. THE IMPORTED MATERIAL SHALL HAVE NO MORE THAN 40% PASSING THE NO. 40 SIEVE AND 15% PASSING THE NO. 200 SIEVE. WAIVERS TO THESE REQUIREMENTS CAN ONLY BE GIVEN JOINTLY BY THE OWNER AND THE GEOTECHNICAL ENGINEER THAT PREPARED THE SOILS REPORT.

7. THE CONTRACTOR SHALL TAKE ALL NECESSARY PRECAUTIONS TO PROTECT EARTHWORK OPERATIONS FROM WEATHER AND GROUND WATER INCLUDING KEEPING POSITIVE DRAINAGE. DIVERT DRAINAGE, DEWATERING AND SEALING DISTURBED AREAS WITH A STEEL DRUM ROLLER PRIOR TO INCLEMENT WEATHER.

8. ALL FINAL SUBGRADE UNDER PROPOSED PAVEMENT, BUILDING OR OTHER STRUCTURE SHALL BE PROOF ROLLED AS DESCRIBED ABOVE FOR IDENTIFYING OF SOFT AREAS. AREAS FOUND TO BE UNACCEPTABLE SHALL BE SCARIFIED, DRIED AND RECOMPACTED. RETEST BY PROOF ROLL AS NECESSARY.

9. ALL EXCAVATIONS SHALL MAINTAIN SAFE SIDE SLOPES IN ACCORDANCE WITH LOCAL, STATE AND OSHA REQUIREMENTS. NO STOCKING OF MATERIAL CLOSE TO AN OPEN CUT OR STEEP SLOPE WILL BE PERMITED IN AN EFFORT TO PREVENT CAVE-INS.

10. TRENCH EXCAVATIONS SHALL BE MADE UNIFORM AS SHOWN ON PLAN. NO MORE TRENCH SHALL BE OPEN IN ONE DAY THAN CAN BE PROPERLY BACKFILLED IN THAT SAME DAY TO MINIMIZE WEATHER AND SAFETY CONCERNS. COMPACTION REQUIREMENTS ARE NOT RELIEVED IN THESE AREAS AND WILL REMAIN AS STATED ON THE DRAWINGS OR ABOVE.

11. IF ROCK IS ENCOUNTERED THAT WAS NOT INDICATED ON THE PLANS OR SOILS REPORT, THE CONTRACTOR SHALL INFORM THE OWNER / ENGINEER OF THE RECORD FOR ALTERNATIVE DESIGN. NO ROCK EXCAVATION IS EXPECTED.

12. WHERE ROCK IS ADJACENT TO A STRUCTURE OR UTILITY THE ROCK SHALL BE REMOVED TO A MINIMUM OF 6 INCHES BELOW AND 1 TIMES THE DIAMETER BUT NOT LESS THAN 1 FOOT OR GREATER THAN 3 FEET ON ANY SIDE OF THE UTILITY OR STRUCTURE.

13. NO EXPLOSIVES WILL BE ALLOWED. NO BLASTING IS ALLOWED AT THIS PROJECT SIDE.

14. UNLESS OTHERWISE NOTED ON THE PLANS, THE CONTRACTOR SHALL REMOVE ALL EXCESS TOPSOIL, CUT MATERIAL OR WASTE FROM SITE AND DISPOSE OF IN A LEGAL MANNER.

15. CONTRACTOR SHALL PROVIDE TEMPORARY SUPPORT STRUCTURE FOR EXCAVATION AS REQUIRED.

16. CONTRCTOR SHALL PROTECT ALL UNDERGROUND PIPES AND FACILITIES, INCLUDING UTILITY AND STORMWATER PIPES AND CATCH BASINS THROUGHOUT EXCAVATION AND CONSTRUCTION. ANY DAMAGE TO THE ABOVEMENTIONED FACILITIES SHALL BE REPAIRED AT CONTRACTOR'S COST.

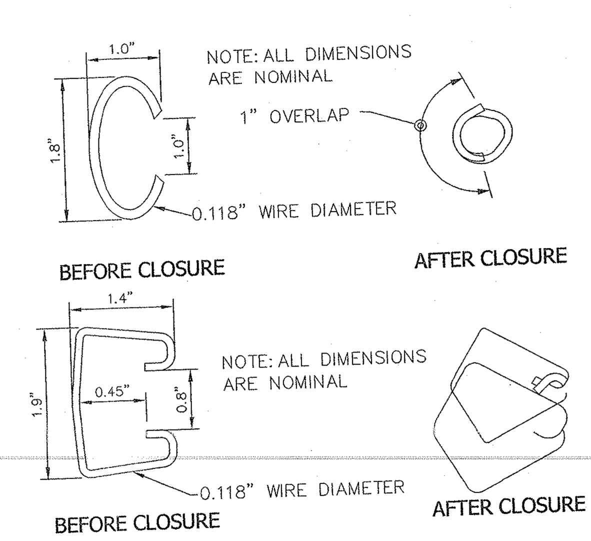

INTERLOCKING WIRE FASTENER

OVERLAPPING RING WIRE FASTENER

ALTERNATE TYING FASTENERS

N.T.S.

GABION WALL NOTES:

1. THE SCOPE OF WORK SHALL CONSIST OF FURNISHING; ASSEMBLING AND INSTALLING ROCK FILLED WIRE MESH GABION BASKETS.
2. GABIONS SHALL BE FABRICATED, ASSEMBLED AND INSTALLED IN ACCORDANCE WITH THE NOMINAL WIRE SIZES AND DIMENSIONS FOUND IN TABLES 1, USING THE FOLLOWING MATERIALS.
3. WIRE FOR FABRICATION AND ASSEMBLY SHALL BE HOT-DIP GALVANIZED. THE WIRE SHALL HAVE A MINIMUM TENSILE STRENGTH OF 60,000 PSI. GALVANIZED STEEL WIRE SHALL CONFORM TO ASTM A 641, CLASS 3, AND SOFT TEMPER.
4. ALTERNATE FASTENERS FOR USE WITH WIRE MESH GABIONS, SUCH AS RING FASTENERS, SHALL BE FORMED FROM WIRE MEETING THE SAME QUALITY AND COATING THICKNESS REQUIREMENTS AS SPECIFIED FOR THE GABIONS.
5. STANDARD FASTENERS AND ALTERNATE FASTENERS MUST PROVIDE A MINIMUM STRENGTH OF 1,400 LBS. PER LINEAL FOOT FOR GABION BASKETS AND 9000 LBS. PER LINEAL FOOT FOR GABION MATTRESSES. WHEN USED TO INTERCONNECT GABION BASKETS OR MATTRESSES WITH PVC COATING, RING FASTENERS SHALL BE MADE OF STAINLESS STEEL AND SPIRAL FASTENERS SHALL BE PVC COATED.
6. ROCK SHALL CONFORM TO THE QUALITY REQUIREMENTS AS FOLLOWS AND AT LEAST 85 PERCENT IF THE ROCK PARTICLES, BY WEIGHT, SHALL BE WITHIN THE PREDOMINANT ROCK SIZE RANGE. RECYCLED CONCRETE MAY BE USED IN LIEU OF THE SPECIFIED AGGREGATE AT THE ENGINEER'S DISCRETION.

	GABION BASKET HEIGHT (INCHES)	PREDOMINANT ROCK SIZE (INCHES)	MINIMUM ROCK DIMENSION (INCHES)	MAXIMUM ROCK DIMENSION (INCHES)
BASKET	12" 18" 36"	4 TO 8	4	8

7. THE FOUNDATION ON WHICH THE GABIONS ARE TO BE PLACED SHALL BE CUT OR FILLED AND GRADED TO THE LINES AND GRADES SHOWN ON THE DRAWINGS.
8. SURFACE IRREGULARITIES, LOOSE MATERIAL, VEGETATION, AND ALL FOREIGN MATTER SHALL BE REMOVED FROM FOUNDATION SURFACE AREA.
9. WHEN FILL IS REQUIRED, IT SHALL CONSIST OF MATERIALS CONFORMING TO THE SPECIFIED REQUIREMENTS.
10. GABIONS AND BEDDING OR SPECIFIED GEOTEXTILES SHALL NOT BE PLACED UNTIL THE FOUNDATION PREPARATION IS COMPLETED, AND THE SUBGRADE SURFACES HAVE BEEN INSPECTED AND APPROVED BY THE ENGINEER'S REPRESENTATIVE.
11. COMPACTION BEDDING OR FILTER MATERIAL WILL BE REQUIRED PER PLANS AND SPECIFICATIONS.
12. THE SURFACE OF THE FINISHED MATERIAL SHALL BE TO GRADE AND FREE OF MOUNDS, DIPS OR WINDROWS. EXTRA CARE SHOULD BE TAKEN WITH FOUNDATION PREPARATIONS IN ORDER TO ENSURE A LEVEL AND SMOOTH SURFACE.
13. THE ASSEMBLY AND PLACEMENT OF GABIONS SHALL BE IN ACCORDANCE WITH THE FOLLOWING PROCEDURES:

GENERAL RETAINING WALL NOTES

1. WALL CONSTRUCTION SHALL BE SUPERVISED BY A QUALIFIED ENGINEER OR TECHNICIAN TO VERIFY FIELD AND SITE SOIL CONDITIONS. IF THIS WORK IS NOT PERFORMED BY THE SITE GEOTECHNICAL ENGINEER, A QUALIFIED GEOTECHNICAL ENGINEER/TECHNICIAN SHALL BE CONSULTED IN THOSE MATTERS PERTAINING TO THE SOIL CONDITIONS AND WALL PERFORMANCE.
2. THE FOUNDATION SOILS AT THE BASE OF THE WALL(S) SHALL BE INSPECTED BY THE ENGINEER. ANY UNSUITABLE SOILS OR IMPROPERLY COMPACTED EMBANKMENT MATERIAL SHALL BE REMOVED AND REPLACED AS DIRECTED BY THE ENGINEER PRIOR TO WALL CONSTRUCTON TO PROVIDE ADEQUATE BEARING CAPACITY AND MINIMIZE SETTLEMENT.
3. ALL WALL EXCAVATION AND RETAINED SOILS SHALL BE INSPECTED FOR GROUNDWATER CONDITIONS. ANY ADDITIONAL DRAINAGE PROVISIONS REQUIRED IN THE FIELD SHALL BE INCORPORATED INTO THE WALL CONSTRUCTION AS DIRECTED BY THE GEOTECHNICAL ENGINEER.
4. ALL SOIL BACKFILL SHALL BE TESTED BY THE ENGINEER FOR MOISTURE, DENSITY, AND COMPACTION PERIODICALLY (EVERY 2' VERTICALLY, 100'-200' C/C) MEETING THE MINIMUM REQUIREMENTS OF THE APPROVED DESIGN PLANS OR SPECIFICATIONS.
5. ALL WALL ELEVATIONS, GRADES, AND BACKSLOPE CONDITIONS SHALL BE VERIFIED BY THE ENGINEER IN THE FIELD FOR CONFORMANCE WITH APPROVED DESIGN PLANS. ANY REVISIONS TO THE STRUCTURE GEOMETRY OR DESIGN CRITERIA SHALL REQUIRE DESIGN MODIFICATIONS PRIOR TO PROCEEDING WITH CONSTRUCTION.
6. DURING WALL CONSTRUCTION, PERIODIC INSPECTION SHALL BE CONDUCTED FROM START TO COMPLETION, AND CERTIFIED THAT THE WALL HAS BEEN CONSTRUCTED IN ACCORDANCE WITH THE DESIGN BY A REGISTERED LICENSED PROFESSIONAL ENGINEER IN THE STATE OF NEW YORK.

INSPECTION AND CERTIFICATION NOTES

A. ANY PROPOSED RETAINING WALLS SHALL BE DESIGNED AND INSPECTED DURING CONSTRUCTION, AND CERTIFIED THAT THAY HAVE BEEN CONSTRUCTED IN ACCORDANCE WITH THE DESIGN BY A REGISTERED PROFESSIONAL ENGINEER IN THE STATE OF NEW YORK.

B. TOP OF RETAINING WALL SHALL MATCH PROPOSED GRADE.

1) CONTRACTOR TO CONTACT ALL INVOLVED AGENCIES PRIOR TO EXCAVATION.
2) IF REQUIRED, THE CONTRACTOR TO OBTAIN BUILDING PERMIT FROM THE APPROPRIATE GOVERNING AUTHORITY.
3) MINIMUM INSPECTIONS ARE AS FOLLOWS:
   A) FOOTING INSPECTION
   B) MID HEIGHT INSPECTION
   C) FINAL INSPECTION

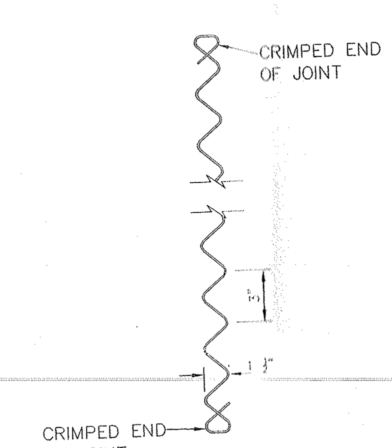

0.150" DIAMETER SPIRAL BINDER

N.T.S.

13.1. ASSEMBLY. ROTATE THE GABION PANELS IN TO POSITION AND JOIN THE VERTICAL EDGES WITH FASTENERS FOR GABION ASSEMBLY. WHERE LACING WIRE IS USED, WRAP THE WIRE WITH ALTERNATING SINGLE AND DOUBLE HALF HITCHES AT INTERVALS BETWEEN FOUR (4) TO FIVE (5) INCHES. WHERE SPIRAL FASTENERS ARE USED, CRIMP THE ENDS TO SECURE THE SPIRALS IN PLACE. WHERE RING TYPE ALTERNATE FASTENERS ARE USED FOR BASKET ASSEMBLY, INSTALL THE FASTENERS AT A MAXIMUM SPACING OF 6 INCHES. USE THE SAME FASTENING PORCEDUREX TO INSTALL INTERIOR DIAPHRAGMS WHERE THEY ARE REQUIRED.

13.2. INTERIOR DIAPHRAGMS WILL BE REQUIRED WHERE ANY INSIDE DIMENSIONS EXCEEDS THREE (3) FEET FOR GABION BASKETS THICKER THAN 12". DIAPHRAGMS WILL BE INSTALLED TO ASSURE THAT NO OPEN INTERVALS EXCEEDS THREE (3) FEET. FOR BASKETS 12" OR LESS RECTANGULAR CELLS ARE ALLOWED WITH DIMENSIONS 36" IN ONE DIRECTION AND NOT TO EXCEED 72" IN THE PERPENDICULAR DIRECTION.

13.3. PLACEMENT. PLACE THE EMPTY GABIONS ON THE FOUNDATION AND INTERCONNECT THE ADJACENT GABIONS ALONG THE TOP, BOTTOM, AND VERTICAL EDGES USING LACING WIRE OR SPIRALS. WRAP THE WIRE WITH ALTERNATING SINGLE AND DOUBLE HALF HITCHES AT INTERVALS BETWEEN FOUR (4) TO SIX (6) INCHES. SPIRAL FASTENERS ARE COMMONLY USED FOR THE ASSEMBLY AND INTERCONNECTION OF WELDED MESH GABIONS. SPIRALS ARE SCREWED DOWN AT THE CONNECTING EDGES THEN EACH END OF THE SPIRAL IS CRIMPED TO SECURE IT IN PLACE. LACING MAY BE USED AS NEEDED TO SUPPLEMENT THE INTERCONNECTION OF WELDED MESH GABIONS, ADN THE CLOSING OF LIDS.

13.4. INTERCONNECT EACH LAYER OF GABIONS TO THE UNDERLYING LAYER OF GABIONS ALONG THE FRONT, BACK, AND SIDES. STAGGER THE VERTICAL JOINTS BETWEEN THE GABIONS OF ADJACENT ROWS AND LAYER BY AT LEAST ONE-HALF OF A CELL LENGTH.

14. FILLING OPERATION:

14.1. AFTER ADJACENT EMPTY WIRE GABION UNITS ARE SET INLINE AND GRADE AND COMMON SIDES PROPERLY CONNECTED, THEY SHALL BE PLACED IN STRAIGHT-LINE TENSION TO GAIN A UNIFORM ALIGNMENT. STAKING OF THE GABIONS MAY BE DONE TO MAINTAIN THE ESTABLISHED PROPER ALIGNMENT PRIOR TO THE PLACEMENT OF THE ROCK. NO TEMPORARY SSTAKES SHALL BE PLACED THROUGH GEOTEXTILE MATERIAL. CONNECTING LACING WIRE AND OTHER FASTENERS (AS ALLOWED) SHALL BE ATTACHED DURING THE FILLING OPERATION TO PRESERVE THE STRENGTH AND SHAPE OF THE STRUCTURE.

14.2. INTERNAL CONNECTING CROSS-TILE WIRES SHALL BE PLACED IN EACH UNRESTRAINED GABION CELL GREATER THAN 18 INCHES IN HEIGHT, INCLUDING GABION CELLS LEFT TEMPORARILY UNRESTRAINED. TWO INTERNAL CONNECTING WIRES SHALL BE PLACED CONCURRENTLY WITH ROCK PLACEMENT, AT EACH 12-INCH INTERVAL OF DEPTH.

14.3. IN WELDED MESH GABIONS THESE CROSSTIES OR STIFFENERS WILL BE PLACED ACROSS THE CORNERS OF THE GABIONS (AT 12 INCHES FROM THE CORNERS) PROVIDING DIAGONAL BRACING. LACING WIRE OR PREFORMED WIRE STIFFENERS MAY BE USED.

14.4. THE GABIONS SHALL BE CAREFULLY FILLED WITH ROCKS, EITHER BY MACHINE OR HAND METHODS, ENSURING ALIGNMENT, AVOIDING BULGES, AND PROVIDING A COMPACT MASS THAT MINIMIZES VOIDS. AT NO POINT IN THE FILLING PROCESS MAY ROCK BE MECHANICALLY PLACED FROM A HEIGHT OF OVER 36" FROM MACHINE TO FILL AREA. MACHINE PLACEMENT WILL REQUIRE SUPPLEMENTING WITH HANDWORK TO ENSURE THE DESIRED RESULTS. THE CELLS IN ANY ROW SHALL BE FILLED IN STAGES SO THAT THE DEPTH OF ROCK PLACED IN ANY ONE CELL DOES NOT EXCEED THE DEPTH OF ROCK IN ANY ADJOINING CELL BY MORE THAN 12 INCHES. ALONG THE EXPOSED FACES, THE OUTER LAYER OF STONE SHALL BE CAREFULLY PLACED AND ARRANGED BY HAND TO ENSURE A NEAT, COMPACT PLACEMENT WITH A UNIFORM APPEARANCE.

14.5. THE LAST LAYER OF ROCK SHALL BE UNIFORMLY LEVELED TO THE TOP EDGES OF GABIONS. LIDS SHALL BE PLACED OVER THE ROCK FILLING USING ONLY APPROVED LID CLOSING TOOLS AS NECESSARY. THE USE OF CROWBARS OR OTHER SINGLE POINT LEVERAGE BARS FOR LID CLOSING IS PROHIBITED DUE TO THE POTENTIAL FOR DAMAGE TO BASKETS.

14.6. THE GABION LID SHALL THEN BE SECURED TO THE SIDES, ENDS, AND DIAPHRAGMS WITH SPIRAL BINDERS, APPROVED ALTERNATE FASTENERS, OR LACING WIRE WRAPPED WITH ALTERNATING SINGLE AND DOUBLE HALF-HITCHES IN THE MESH OPENINGS.

14.7. ANY DAMAGE TO THE WIRE OR COATINGS DURING ASSEMBLY, PLACEMENT AND FILLING SHALL BE REPAIRED PROMPTLY IN ACCORDANCE WITH THE MANUFACTURER'S RECOMMENDATIONS OR REPLACED WITH UNDAMAGED GABION BASKETS.

TABLE 1 (MINIMUM REQUIREMENTS)

GABION BASKETS – HEIGHT 12, 18, OR 36 INCHES, LENGTH AS SPECIFIED

TYPE OF WIRE	MESH SIZE (INCHES)	WIRE DIAMETER (INCHES)	PVC COATING (INCHES)	TOTAL DIAMETER (INCHES)	GALVANIZED COATING OZ./SF
LACING WIRE		0.086	0.02	0.126	0.70
WELDED MESH	3 X 3	0.118	NONE	0.118	0.80
	3 X 3	0.105	0.02	0.145	0.80
SPIRAL BINDER		0.105	0.02	0.145	0.80

DESIGN PARAMETERS

SOIL AND DESIGN PARAMETERS

A. THE FOLLOWING SOIL PARAMETERS, HAVE BEEN USED FOR THE PREPARATION OF THE FINAL DESIGN:

DESIGN PARAMETERS*

SOIL	SOIL UNIT WEIGHT (PCF)	INTERNAL FRICTION ANGLE (ϕ)
BACKFILL	125	27.0
FOUNDATION SOIL	125	27.0

APPLIED SURCHARGE LOADING=40 PSF (SNOW LOAD)

* SOIL PARAMETERS CONERVATIVELY ASSUMED FOR DESIGN

MINIMUM FACTORS OF SAFETY

OVERTURNING	2.0
SLIDING	1.5
BEARING CAPACITY	2.0

PROVIDED FACTORS OF SAFETY

OVERTURNING	2.5
SLIDING	2.1
BEARING CAPACITY	2.1

B. SHOULD THE ACTUAL SOIL CONDITIONS OBSERVED DURING CONSTRUCTION DIFFER FROM THOSE ASSUMED FOR THE DESIGN, DESIGN SHALL BE REVIEWED BY THE WALL DESIGN ENGINEER AT THE OWNER'S GEOTECHNICAL ENGINEER'S DIRECTION.

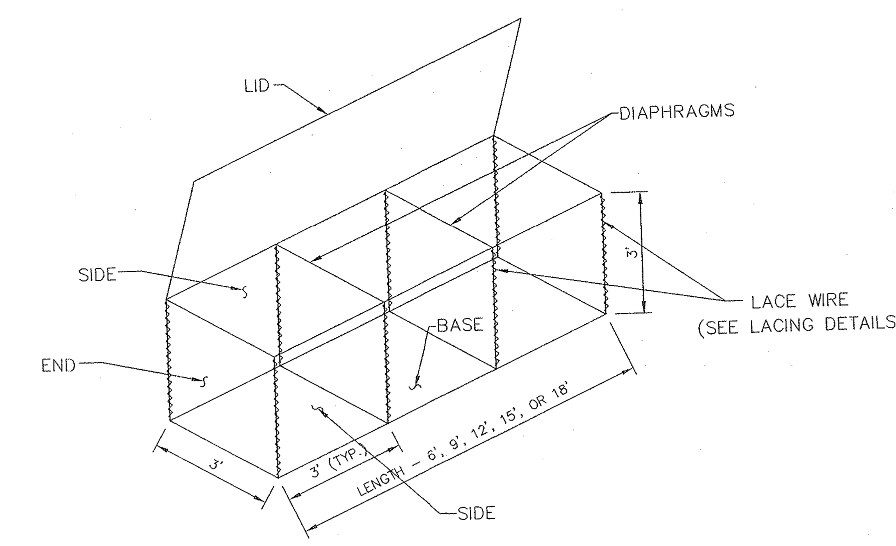

TYPICAL ASSEMBLED GABION BASKET

N.T.S.

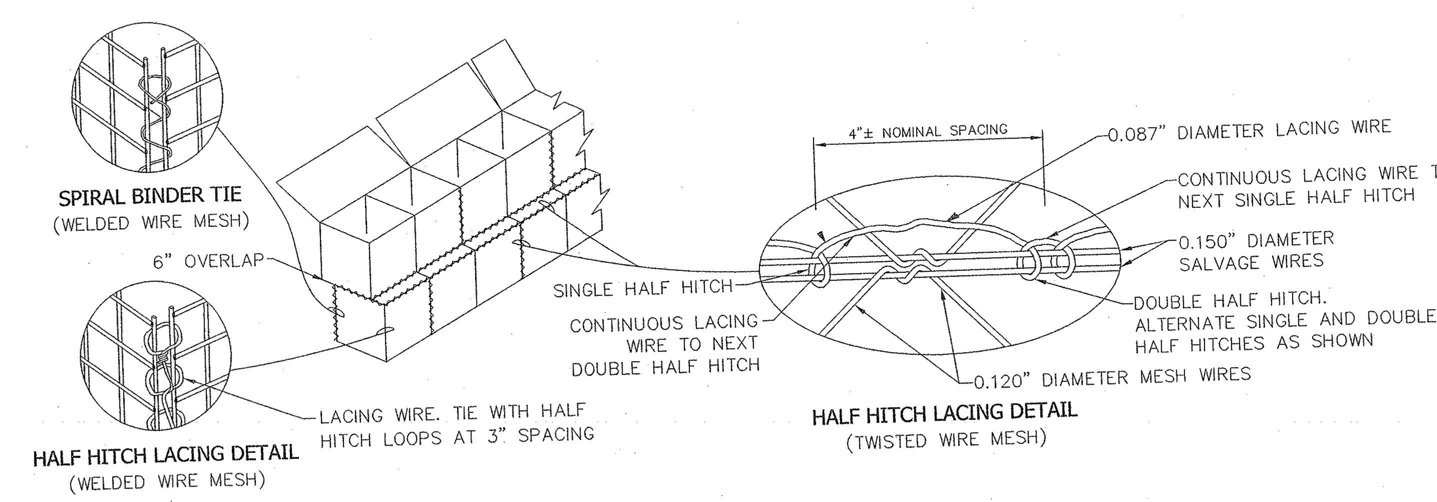

TYPICAL INSTALLATION GABION BASKETS

N.T.S.

THE EDUCATION LAW OF THE STATE OF NEW YORK PROHIBITS ANY PERSON ALTERING ANYTHING ON THESE DRAWINGS AND/OR THE ACCOMPANYING SPECIFICATIONS, UNLESS IT IS UNDER THE DIRECTION OF A LICENSED PROFESSIONAL ENGINEER. WHERE SUCH ALTERATIONS ARE MADE, THE PROFESSIONAL ENGINEER MUST SIGN, SEAL, DATE AND DESCRIBE THE FULL EXTENT OF THE ALTERATION ON THE DRAWINGS AND/OR IN THE SPECIFICATIONS. (NYS EDUCATION LAW SECTION 7209-2)

"UNAUTHORIZED ALTERATIONS OR ADDITIONS TO A SURVEY MAP BEARING A LICENSED LAND SURVEYOR'S EMBOSSED SEAL IS A VIOLATION OF SECTION 7209, SUBDIVISION 2, OF THE NEW YORK STATE EDUCATION LAW."
"ONLY COPIES FROM THE ORIGINAL TRACING OF THIS SURVEY MAP MARKED WITH THE LAND SURVEYOR'S EMBOSSED SEAL SHALL BE CONSIDERED TO BE VALID TRUE COPIES."
"CERTIFICATION INDICATED HERE ON SIGNIFY THAT THIS SURVEY WAS PREPARED IN ACCORDANCE WITH THE EXISTING CODE OF PRACTICE FOR LAND SURVEYOR'S ADOPTED BY THE DELAWARE - HUDSON LAND SURVEYORS ASSOCIATION. SAID CERTIFICATIONS SHALL RUN ONLY TO THOSE NAMED INDIVIDUALS AND/OR INSTITUTIONS FOR WHOM THE SURVEY WAS PREPARED. CERTIFICATIONS ARE NOT TRANSFERABLE TO ADDITIONAL INDIVIDUALS, INSTITUTIONS, THEIR SUCCESSORS AND/OR ASSIGNS OR SUBSEQUENT OWNERS."

STATE OF NEW YORK · RYAN A. NASHER · PROFESSIONAL ENGINEER
RYAN A. NASHER, P.E.
N.Y.S. P.E. LIC. NO. 89066

STATE OF NEW YORK · JOHN R. ATZL · LAND SURVEYOR
JOHN R. ATZL
N.Y.S. P.L.S. LIC. NO. 50228

REVISION	DATE	DESCRIPTION
4	09-22-20	WALL DESIGN REVISED PER OWNER
3	07-17-20	PER MARTOS ENGINEERING COMMENTS
2	07-07-20	PER TOWN COMMENTS 07-01-20
1	06-29-20	PER PB MTG 06-01-20

AN&Z
ATZL, NASHER & ZIGLER P.C.
ENGINEERS-SURVEYORS-PLANNERS
232 North Main Street
New City, New York 10956
Tel: (845) 634-4694
Fax: (845) 634-5543
E-mail: info@anzny.com
Web: www.ANZNY.com

PROJECT:

119 TWEED BLVD., LLC

TOWN OF ORANGETOWN
ROCKLAND COUNTY, NEW YORK

TITLE:

RETAINING WALL NOTES & DETAILS

DRAWN BY: LK	CHECKED BY: VR
DATE: JANUARY 22, 2020	SCALE: N/A
PROJECT NO: 4692	DRAWING NO: 5